Faculty Publications Bibliography

1999

Texas A&M University
Corpus Christi

The works listed here represent the scholarly pursuits and products of the Texas A&M University-Corpus Christi faculty and staff during the 1999 calendar year. It is with great pride and gratitude that the Mary & Jeff Bell Library honors their contributions to their fields and presents this bibliography.

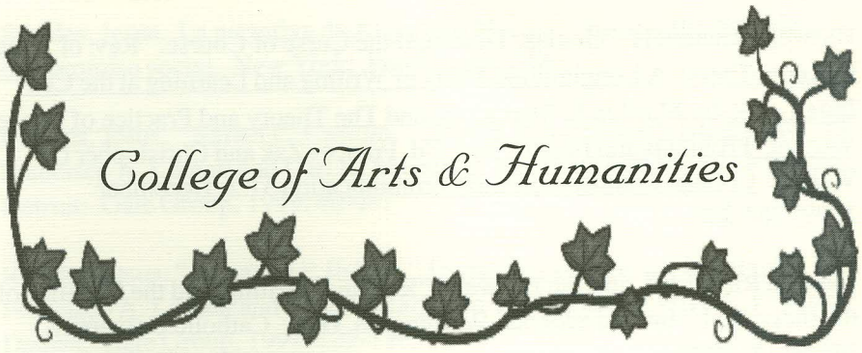

Haswell, Janis E. "The Eye of the Beholder." Rev. of George's Ghosts: A New Life of W.B. Yeats, by Brenda Maddox. The South Carolina Review 32.1 (Fall 1999): 243-245.

Haswell, Janis E. "Student Testimonies: Moral Inquiry in the Composition Classroom." Journal of Teaching Writing. 16.1 (1999):3-41.

Haswell, Janis E. "Using PowerPoint in Literature Courses: How the Visual Can Illuminate the Textual." Anticipating Change: Innovations in Learning, Teaching and Assessment. January 1999.

Haswell, Janis E. "Workshop Presentation: A Holocaust Journey: Classroom Encounters." Conference on College Composition and Communication. Atlanta, GA: March 1999.

Haswell, Janis E. "Spinning our Students into Gold: Ethical Issues on the Representations of Students in Composition." Conference on College Composition and Communication. Atlanta, GA: March 1999.

Haswell, Richard H. and Min-Zhan Lu. Comp Tales. New York, NY: Longman, 2000.

Haswell, R., Terri L. Briggs, Jennifer A. Fay, Norman K. Gillen, Rob Harril, Andrew M. Shupala, and Sylvia S. Trevino. "Context and Rhetorical Reading Strategies: Haas and Flower (1988) Revisited." Written Communication 16.1 (January 1999):3-27.

Haswell, Richard H. "Grades, Time, and the Curse of Course." Rev. of Time to Know Them: A Longitudinal Study of Writing and Learning at the College Level, by Marilyn S. Sternglass, and The Theory and Practice of Grade Writing: Problems and Possibilities, Ed. Frances Zak and Christopher C. Weaver. College Composition and Communication 51.2 (December 1999):284-295.

Haswell Richard H. and Jan Haswell. "Reading, Writing, and the Sacrifice of the Individual." Invited address. Washington, D.C.: Catholic University, March 18, 1999.

Haswell, Richard H. "Under the Skin: The Literacy Story and the Personal-Experience Anecdote." National Council of Teachers Conference on Narrative. Tucson, AZ: April 30, 1999.

Haswell, Richard H. "Desperate Measures: Coding Spoken Protocols." Annual Convention, Conference on College Composition and Communication. Atlanta, GA: March 24, 1999.

Haswell, Richard H. "Less is More—Placement is Diagnosis." Standards, Assessment, Remediation Workshop, Conference on College Composition and Communication. Atlanta, GA: March 24, 1999.

Haswell, Richard H. and Jan Haswell. "Invented Ethos and Cross-Dressed Writing: Yeats' Gendered Rhetoric as a Guide to Evaluate Student Writing." Annual Conference, International Society for the History of Rhetoric. Amsterdam: July 1999.

Huerta, Juan Carlos. "Ideology, Partisanship, Economics: Implications for Latino Politics." 57th Annual Meeting of the Midwest Political Science Association. Chicago, IL: Palmer House Hilton, April 15-17, 1999.

Hill, Sam S., Gerald P. Koocher and John C. Norcross, eds. Psychologists' Desk Reference. New York: Oxford University Press, 1998.

Lessoff, Alan. "Public Sculpture in Corpus Christi: A Tangled Struggle to Define the Character and Shape the Agenda of One Texas City." Journal of Urban History. 26.2 (January 2000):190-223.

Rosales, Jesus. La narrativa de Alejandro Morales: Encuentro, historia y compromiso social. New York: Peter Lang, 1999.

Rosales, Jesus. "Rafael C. Castillo." Dictionary of Literary Biography. . Ed. Francisco A. Lomeli and Carl R. Shirley. v. 209. Chicano Writers 3rd Series. Detroit: Gale Group, 1999. 40-44.

Rosales, Jesus. "Armando P. Ibáñez." Dictionary of Literary Biography. Ed. Francisco A. Lomeli and Carl R. Shirley. v. 209. Chicano Writers 3rd Series. Detroit: Gale Group, 1999. 122-126.

Rote, Carey and Jacinto Quirarte. Cesar A. Martinez: A Retrospective. San Antonio, TX : The Marion Koogler McNay Art Museum, 1999.

Sullivan, Nancy and Robert T. Shatz. "When Cultures Collide: the Official Language Debate." Language & Communication 19 (1999): 261-275.

College of Business

Abdelsamad, Moustafa, ed. SAM Advanced Management Journal. 64.1-4 (1999).

Abdelsamad, Moustafa, and Elwin R. Myers, eds. The Proceedings of the SAM International Management Conference, Business Issues for the New Millennium. 1999.

Benavides, Adolfo. "The Labor Productivity Competitiveness of U.S. versus Foreign Commercial Banks." The Journal of Global Competitiveness. 7.1 (1999):261-269.

Benavides, Adolfo. "The Relationship Between Bank Size and Labor Productivity in the International Commercial Banking Industry." Association for Global Business 1999 Conference Proceedings. Las Vegas, NV, November 18-21, 1999:241-244.

Benavides, Adolfo. "The Aristotelian Foundations of Colonial Spanish Economic Thought." Southwestern Society of Economists 1999 Conference Proceedings. Houston, TX, March 10-13, 1999:70-75.

Benavides, Adolfo. "The Port of Corpus Christi's Impact on the Coastal Bend Economy." Corpus Christi and the Coastal Bend Economic Pulse. Corpus Christi, TX: Texas A&M University-Corpus Christi, College of Business, 1999.

Hall, Steven, and Jennifer Terrill, eds. Transportation Systems 2000 Workshop Proceedings, Sharing Technology for the Future. San Antonio, TX, February 28-March 3, 2000.

Hall, Steven, ed. Proceedings of the American Society of Business and Behavioral Sciences Track: Accounting. Las Vegas, NV: February 17-21, 2000.

Hall, Steven, Leon Knight, Ray E. Whitmire, and Dianne J. Hall. "Current Status and Plans for Internet Banking as Reported by Bank CEOs." Journal of Financial Services Marketing. 4.1 (1999):49-64.

Hall, Steven and Rebecca Hicks. "Will Fair Market Value Accounting Replace Historical Cost Accounting?" 1999 Proceedings of the SAM International Management Conference "Business Issues for the New Millennium. 437-444.

Hein, Cheryl. "Offshore Trusts for Asset Protection." SAM Advanced Management Journal. 64.1 (Winter 1999):13-16.

Hein, Cheryl and Paul Cameron. "Major Changes in the Accounting Profession—An Assessment of the Uniform Accounting Act." Proceedings of the American Society of Business and Behavioral Sciences Track: Accounting. Las Vegas, NV: February 17-21, 2000:265-271.

Hein, Cheryl. "Countertrade: An Old But Growing Method of Payment." Journal of Accounting and Financial Research. 7.2 (Fall 1999):51-54.

Hein, Cheryl. "Different Strokes for Different Folks." Presented at the Southwest Case Research Association Annual Meeting, San Antonio, March 2000.

Hein Cheryl. "Accounting for Islamic Banking and Business." Presented at the Academy of International Business Annual Meeting in San Antonio, TX. March 2000.

Hein, Cheryl. "American Depositary Receipts (ADRS): A Convenient Way for Investing Internationally." Presented at the Academy of International Business Annual Meeting in San Antonio, TX. March 2000.

Hein, Cheryl. "Mercosur: A New and Important South American Trading Bloc." Presented at the American Association of Accounting and Finance Annual Meeting, New Orleans, LA, December 1999.

Hein, Cheryl and Paul Cameron. "A Fresh Look at the Foreign Corrupt Practices Act." Allied Academies Conference, Las Vegas, NV: October 1999:12-17.

Hein, Cheryl. "Mercosur: South America's Most Powerful Trading Group." International Trade and Finance Association International Conference, Casablanca, Morocco, May 26-29, 1999.

Hormozi, Amir, Robert McMinn, and Okeleke Nzeogwu "Project Life Cycle: The Termination Phase," SAM Advanced Management Journal. 45-51. Also appeared in 1998 Proceedings of the SAM International Management Conference. 477-482.

Hormozi, Amir, "Y2K Contingency Planning: What your Company Can do Before December 31, 1999," IIE Solutions. 31.11(November 1999):34-36.

Hormozi, Amir, "An Analysis of How the Banking Industry Is Managing Its Y2K Problem," Management In Practice, 4 (1999):1-4.

Hormozi, Amir, and Leon Dube, "Establishing Project Control: Quality, Schedule, and Cost," SAM Advanced Management Journal, 64.4 (1999):32-38. Also appeared in 1998 Proceedings of the SAM International Management Conference. 469-475.

Hormozi, Amir, "Make It Again," IIE Solutions, 31.4 (April 1999):39-44.

Hormozi, Amir, "Year 2000: Is the Banking Industry Ready?," DecisionSciences Institute, Proceedings of the 1999 Annual Meetings. 1337-1339.

Hormozi, Amir, "Engineering Changes in Remanufacturing," 1999 APICS Remanufacturing Seminar Proceedings. (May 1999):1- 4.

Hormozi, Amir, Gail Sutton, Robert McMinn, and Wendy Lucio, "Business Plans: Creating a Path to Business Success," 1999 Proceedings of the SAM International Management Conference. 685-691.

McMinn, Robert. "Where's the Beef? Economics, the Main Course, is Missing from the New Texas Core Curriculum." Proceedings of the 1999 Academy for Economics and Economic Education. Myrtle Beach, SC: 2.1(1999):47-54.

Polansky, Sharon and Pam Stokes. "Shifting the Economic Locus of Control: Improving Financial Decision-making in High-Risk Populations." Academy of Accounting and Financial Studies Journal. 3.1 (1999): 95-102.

Early Childhood Development Center

Brendel, Johnston M. and Kaye W. Nelson. . The Stream of Family Secrets: Navigating the Islands of Confidentiality and Triangulation Involving Family Therapists.. The Family Journal: Counseling and Therapy for Couples and Families. 7.2 (April 1999): 112-117

College of Education

Cassidy, Jack. "What's Hot, What's Not for 2000." Reading Today. 17.3 (December 1999):1,28.

Cassidy, Jack, Literature Consultant. Exploring Literature, by Ann Chatterton Klimas. Circa Pines, MN: American Guidance Service, Inc., 1999.

Cassidy, Jack, Literature Consultant. Exploring Literature, Teacher's Edition, by Ann Chatterton Klimas. Circa Pines, MN: American Guidance Service, Inc., 1999.

Cassidy, Jack, Literature Consultant. World Literature. Circa Pines, MN: American Guidance Service, Inc., 1999.

Cassidy, Jack, Literature Consultant. World Literature,Teacher's Edition . Circa Pines, MN: American Guidance Service, Inc., 1999.

DeVaney, S.B. "Social and Cultural Foundations." The Official Study Course for the National Counselor Examination for Licensure and Certification. Ed. L.C. Loesch. Philadelphia, PA: Taylor & Francis, 1999.

DeVaney, S.B., "Making the Most of Supervision." Chi Sigma Iota Exemplar. 14.3:9,17.

DeVaney, S.B. "Overcoming Fear of Practice: Advice and Reassurance for Counselors-in-Training." Chi Sigma Iota Exemplar. 14.1:1,7.

DeVaney, S.B. "Using Technology: What Counseling Students Can Expect from their Training Programs." Chi Sigma Iota Exemplar. 14.2:11.

Evans, Rodney. The Pedagogic Principal. Edmonton, Canada: Qual Institute Press, 1999.

Evans, Rodney. Rev. of Reforming Educators—Teachers, Experts and Advocates, by S. Mitchell. Canadian Journal of Higher Education 29.2,3:220-228.

Seiger, Lon. Adventure-Based Education: Building a Toolbox of Life Skills. New York, NY: McGraw-Hill, 1999.

Mary and Jeff Bell Library

Kownslar, Edward. "Closing Down a Government Documents Collection." DTTP 27.4 (Winter 1999):11-12.

Landry-Hyde, Denise. "Outreach at a Public, Academic, Regional Library—Texas A&M University-Corpus Christi." The Reference Librarian. 67/68 (1999):289-298.

College of Science and Technology

Autio, Louise and Karen Olson. "Assessing and Planning Primary Care at College and University Health Centers." Holistic Nursing Practice. 13.4 (July 1999):1-8.

Bachnak, R. "Laboratory Experiments in Instrumentation and Control." 1999 ASEE Annual Conference, Session 2259. Charlotte, NC: June 1999.

Bachnak, R. and R. Moore. "Electronic Systems Design: the Need for Integrated Software Simulation." 1999 ASEE Annual Conference, Session 3147. Charlotte, NC: June 1999.

Cameron, Nancy Lee. "Assembly Language Translation in a Computer Organization and PC Assembly Class." Journal of Computing in Small Colleges. 14.3 (Mar. 1999):6-16.

Hartlaub, Mark G., Lauren R. Wisley, and Matthew Hogben. "Searching for a Common Core: An Examination of Human Sexuality Textbook References." Teaching of Psychology. 26 (1999):131-134.

Hickman, Graham C., Contributor. Corpus Christi Zoo. s.n.: s.l., 1999.

Hickman, Graham C., Marc C. Woodin, Mary K. Skoruppa, and Gene W. Blacklock. "Discovery of a Second Population of White-Collared Seedeaters *Sporophila torqueola* (Passeriformes: Emberizidae) Along the Rio Grande of Texas." Southwestern Naturalist 44.4 (December 1999):535-538.

Hickman Graham C., Contributor. Mosaic Evolution of Subterranean Mammals: Regression, Progression, and Global Convergence, by Eviatar Nevo. London: Oxford University Press, 1999.

Jones, Rebecca A. Patronis, Sharon Marham and Richard J. Ricard. "Multidisciplinary Collaboration: A Method for Measurement." Nursing Administration Quarterly. 23.4 (1999): 86-90.

Joyce, Esperanza Villanueva and Maria Elena Villanueva. Say it in Spanish: a Guide for Health Care Professionals. 2nd ed. Philadelphia, PA: W. B. Saunders, 2000.

Kelley, Lois S. Evaluating Change in Quality of Life from the Perspective of the Person: Advanced Practice Nursing and Parse's Goal of Nursing." Holistic Nursing Practice. 13.4:61-70.

McKee, D.A., B. Apostolos, T.M. Samocha and A.L. Lawrence. "The Effect of Two Low-Protein Diets on Water Quality, Growth and Survival of *Penaeus vannamei* Stocked at High Density in Outdoor Production Systems Under no Water Exchange." The Annual International Conference and Exposition of the World Aquaculture Society. Sydney, Australia: April 26-May 2, 1999.

McKee, D.A., T.S. Blacher, T.M. Samocha, R.L. Gandy, A.L. Lawrence, and E.R. Jones. "A Production Protocol of *Penaeus aztecus* (brown shrimp) for Use as Bait Shrimp in the Gulf of Mexico." Aquaculture America '99. Tampa, FL: January 27-30, 1999.

McKee, D.A., D. McIntosh, T.M. Samocha, E.R. Jones, A.L. Lawrence, and J.B. Mott. "The Effect of Two Low-Protein Diets and a Bacterial Supplement on Water Quality, Growth and Survival of *Penaeus vannamei* in a High Density Outdoor Tank System with no Water Exchange." Annual International Conference and Exposition of the World Aquaculture Society. Sydney, Australia: April 26-May 2, 1999.

McKee, D.A., and N.L. Hilbun. "Hands-on Marine Science Education at Texas A&M University-Corpus Christi." Estuarine Research Federation 15th Biennial International Conference, New Orleans, LA: September 25-30, 1999.

McKee, D.A., C.K. Hart, T.M. Samocha, A.L. Lawrence, and J.B. Mott. "Effect of Bacterial Supplement Treatments on Nitrification and Characterization of Biochemical Oxygen Demands in a High Density Zero Water Exchange Outdoor Shrimp Tank System (*L. vannamei*) Using Varied Protein Diets." South Texas Environmental Conference, Corpus Christi, TX: October 21-22, 1999.

Michaud, Patrick. . "Die Pop-Tart-Lötlampe." Der Einfluß von Erdnußbutter auf die Erdrotation—Forschungen, die die Welt nicht braucht. Ed. Marc Abrahams. Basel, Germany: Birkhäuser Verlag, 1998: 73-75.

Sadovski, A.L, and L.E. Sadovski. Mathematics and Sports. Trans. S. Makar-Limanov. Hyderavad, India: Universities Press (India), 1999.

Steidley, Carl W., and Edgar Reyes. "An Engineering Application of the Simulated Annealing Algorithm." The Proceedings of the 1999 Annual Conference of the American Society for Engineering Education. Charlotte, NC: June 20-23, 1999.

Steidley, Carl W., and M. M. "Mike" Asoodeh. "A Technology Outreach Program Using Near-Peer Teaching." Proceedings of the 1999 ASEE-GSW Annual Conference. Dallas, TX: March 7-9, 1999.

Steidley, Carl W., and M. M. "Mike" Asoodeh. "An Interdisciplinary Computing Project Using Near-Peer Methods with an Outreach Component." Journal of Computing in Small Colleges. 15.1 (Nov. 1999):239-245.

Sutherland, Judith A. "Median Therapy: Current Research and Implications for Critical Care." AACN Clinical Issues. 11.1 (2000):97-104.

Sutherland, Judith A. "Foot Acupressure and Massage for Patients with Alzheimer's Disease and Related Dementias." Image: Journal of Nursing Scholarship. 31.4 (1999):347-348.

Wilkins, David E., and Donald R. Currey. "Radiocarbon Chronology and $\delta^{13}C$ Analysis of Mid- to Late-Holocene Aeolian Environments, Guadalupe Mountains National Park, Texas, USA." The Holocene. 9.3 (1999):363-371.

Publication of this Bibliography has been made through the generous support of Ray Hayes, Executive Vice President Finance & Administration.

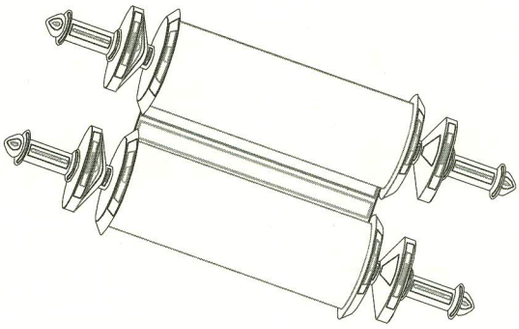

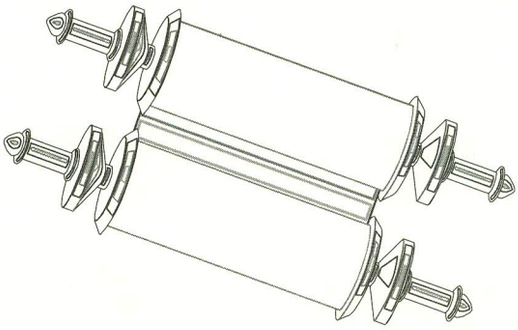

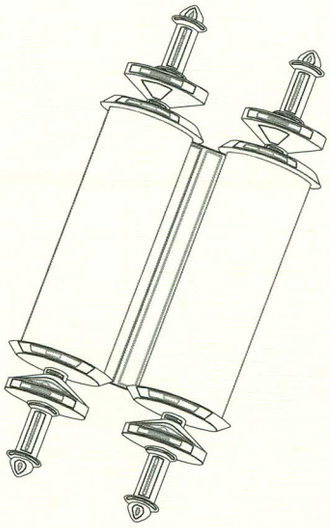

Faculty Publications Addendum

1999

Texas A&M University
Corpus Christi

College of Arts & Humanities

Jackson, Vanessa Furse. " "Tides of the Mind": Restraint and Renunciation in the Poetry of Alice Meynell." Victorian Poetry 36.4 (Winter 1998):443-464.

Jackson, Vanessa Furse. "A Small Independence: the Sisters Make a Decision." Palo Alto Review 8.2 (Fall 1999):56-59.

College of Education

Grace, Marsha. "When Students Create Curriculum." Educational Leadership. 57.3 (November 1999):49-53.

Grace, Marsha. "Be a Better Writer, Be a Better Teacher." Journal of Adolescent and Adult Literacy. 43.1 (September 1999):60-62.

Mary and Jeff Bell Library

Kreneck, Thomas H. "Illustrating Mexican-American History: A Case of Library/ Community/Tex Share Cprperation." Texas Library Journal. (Fall 1999): 118-121.

College of Science and Technology

Lehman, Roy L. "A Checklist of Benthic Marine Macroalgae form the Corpus Christi Bay Area." Texas Journal of Science 51.3 (August 1999):241-252.

Waldbeser, L. S. et al. "*Neisseria gonorrhoeae* mutants altered in toxicity to human fallopian tubes and molecular characterization of the genetic locus involved." Infect. Immunology. 67:643-652.

Waldbeser, L.S., S. Cerowski, and J. Salas. "Effects of *Neisseria meningitidis* on human macrophage viability." 99th General meeting of the American Society for Microbiology. 1999.

Waldbeser, L.S., S. Ommani, and J. Salas. "Effects of *Neisseria meningitidis* on human macrophage viability." Annual Meeting of Society for Experimental Biology and Medicine, Southwest Section. 1999.

Waldbeser, L., L. Erazo, and M. Longoria. "Survival of *Neisseria meningitids* from human macrophage intracellular killing." Annual Meeting of Society for Experimental Biology and Medicine, Southwest Section. 1999.

Faculty Publications 1999
Texas A&M University
Corpus Christi

Center for Coastal Studies

Faunal Succession Brackish Ephemeral Ponds etc. – K. Withers, 15th Estuarine Research Federation (ERF) Sept. 99

A Novel Approach for Assessment Contaminants – S. Carr & M. Nipper April 14-16, '99, FL

The Laguna Madre of Texas & Tamaulipas, an Ecological Synthesis, 15th Estuarine Research Federation (ERF) Spet. 99

Hands-On Marine Science Education etc. – Hilbun, McKee ERF '99

Coastal High Marsh Oil Spill Clean-Up by Burning 5-Year Evaluation – Hyde, Withers, JWT – Conf. Oil Spill Cleanups, Seattle Wash. '99

Toxic Effects of Ordnance Compounds to Marine Organisms – S. Carr M. Nipper – Europe '99

Development of a Wetland Conservation Plan in the Texas Coastal Plan – E. Smith, S. Dilworth

Abundance and Community Structure of Two Seagrass sites in the Sian Ka'an Biosphere Reserve, Quintana Roo, Mexico – Harvey, Withers

Determination of a Population Estimate for Texas Diamondback, Terrapin, Nueces River – K. Halbrook